20/40/50 GHz Fiber Optical Transmitter/Converter

(0.01 to 20/40/50 GHz, analog/digital, auto bias)

DATASHEET

Return to the Webpage

The EOCV Series Fiber Optical Transmitters (Electrical-to-Optical Converters) convert RF input signals into high-fidelity optical outputs, supporting both analog and digital signal transmission across a wide frequency range from DC to 50 GHz. These user-friendly, turnkey benchtop modules integrate a Lithium Niobate fiber-optic modulator, a DFB laser with driver, an automatic bias controller, high-performance control circuitry, and a DC power supply into a convenient plug-and-play unit. An optional RF amplifier is available to reduce the required input signal voltage, making it particularly suitable for high-speed operation. The system also offers an ITU-lockable laser option for precise wavelength control. Laser output power is adjustable via a front-panel rotary knob, allowing users to fine-tune output levels with ease. Designed for RF-over-Fiber applications as well as optical-to-electrical (O-E) device testing and characterization, the EOCV Series provides a versatile, stable, and reliable solution for advanced optical communication and signal processing requirements.

Features

- Up to 50GHz
- Low Drive Voltage
- Wide Temperature Operation
- High Fidelity
- No Drift
- Constant Optical Output
- High Stability

Applications

- 20/40/50 GHz RFoF Transmission
- Analog Photonics
- Testing
- Sub-nanosecond Pulse Generation
- Optical Communication to 40Gb/s
- Active Mode Lock
- EF/IF Signal Distribution
- Satellite Communication

RoHS COMPLIANT

Specifications

Parameter		Min	Typical	Max	Unit
Operation Wavelength		1520		1567	nm
Optical Output Power		1	5	15	mW
Optical Return Loss		40		45	dB
Optical Extinction Ratio	DC	20		23	dB
	RF	16		18	
RF Driving Voltage *			3	4	V
Vp at 40kHz**		2.5	3		V
Bandwidth		DC	20	50	GHz
RF Return Loss		10		12	dB
RF Port Resistance (DC)				50	Ω
RF Input Power				30	dBm
RF Input Connector			2.92 K		
Fiber Type			PM 1550		
Fiber Connector			FC/APC		
Power Input		100		240	VAC
Power Consumption				3	W
Weight			0.5		Kg
Operating Temperature		-20		60	°C
Storage Temperature		-45		85	°C

Notes:

*Operate over the maximum RF power input will burn the device

**with RF amplifier voltage reduce to about 0.8V

Note: The specifications provided are for general applications with a cost-effective approach. If you need to narrow or expand the tolerance, coverage, limit, or qualifications, please [click this link]:

Legal notices: All product information is believed to be accurate and is subject to change without notice. Information contained herein shall legally bind Agiltron only if it is specifically incorporated into the terms and conditions of a sales agreement. Some specific combinations of options may not be available. The user assumes all risks and liability whatsoever in connection with the use of a product or its application.

Rev 02/27/26

P +1 781-935-1200 E sales@agiltron.com W www.agiltron.com

Information contained herein is deemed to be reliable and accurate as of the issue date. We reserve the right to change the design or specifications at any time without notice.
Agiltron is a registered trademark of Optowares Corporation in the U.S. and other countries.

Optical Path Diagram

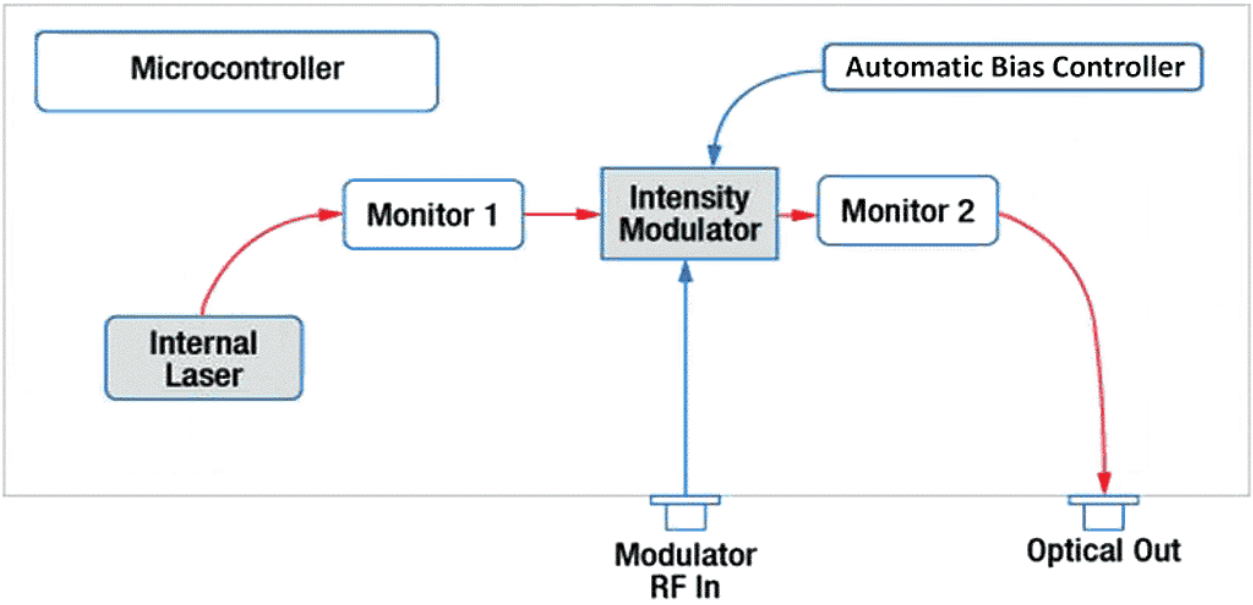

Note:

* Bidirectional means two-way communications via a single fiber link. The price is double since it comprises two pairs of transceivers and receivers with WDM (different wavelength) or circulator (same wavelength) cable jumpers.

Red marked -- Special order

Information contained herein is deemed to be reliable and accurate as of the issue date. We reserve the right to change the design or specifications at any time without notice.
Agiltron is a registered trademark of Optowares Corporation in the U.S. and other countries.

20/40/50 GHz Fiber Optical Transmitter/Converter

(0.01 to 20/40/50 GHz, analog/digital, auto bias)

DATASHEET

Dimensions (Unit: mm)

*Product dimensions may change without notice. This is sometimes required for non-standard specifications.

Ordering Information (Part Number)

	☐	☐☐☐☐☐	☐	3	1	☐
Prefix	**RF Frequency**	**Laser Wavelength ***	**RF Amplifier ****	**Package**	**Configuration**	**Fiber Connector[1]**
EOCV-	20GHz = 2 40GHz = 4 50GHz = 5	C-band = CCCCC L-band = LLLLL 1550 nm = 15500 1551.11 nm = 55111 1562.22 nm = 56222 Tunable ITU Laser =TTTTT	None = 1 4.5V = 4 7V = 7	Benchtop = 3 Special = 0		FC/APC = 2 FC/UPC = U Special = 0

Note:

* Laser on the ITU grid can be selected

*The voltage is max output at the max Frequency listed

[1]. The connector cannot be installed directly onto bare fiber, as it is prone to damage during shipping. However, the connector can be assembled on bare fiber if a 3 cm protective loose tube is added for reinforcement. The customer can remove this protective tube after testing. The optical power handling of a standard connector is less than 0.5 W for SM28 fiber and decreases further with smaller core fibers.

P +1 781-935-1200 E sales@agiltron.com W www.agiltron.com

Information contained herein is deemed to be reliable and accurate as of the issue date. We reserve the right to change the design or specifications at any time without notice.
Agiltron is a registered trademark of Optowares Corporation in the U.S. and other countries.

20/40/50 GHz Fiber Optical Transmitter/Converter

(0.01 to 20/40/50 GHz, analog/digital, auto bias)

DATASHEET

Typical RF Performance S11 and S22

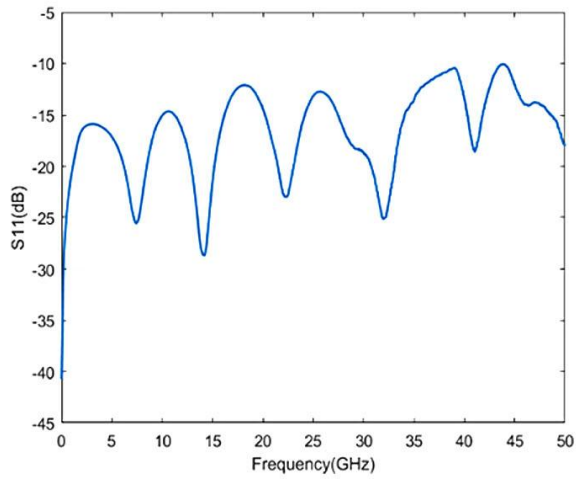

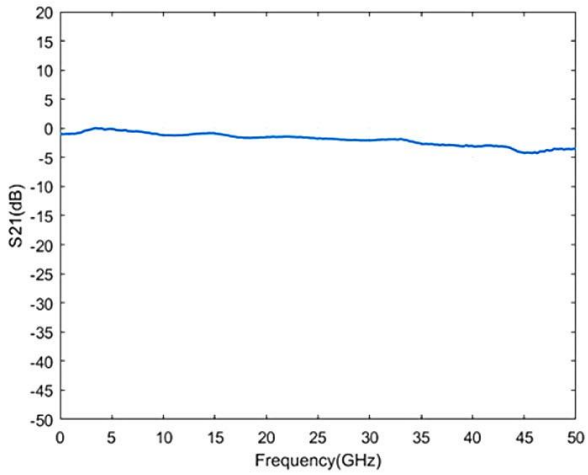

Operation Instruction

1. Power On

Plug in the AC power cord. Turn on the power switch to activate the unit.

2. Set the Laser Power

Adjust the laser power knob to select the desired output power, displayed in milliwatts (mW) on the front panel.

3. Select Modulator Bias Mode

Use the modulator mode switch to choose the desired operation mode: Peak, Null, or Quadrature.

4. Input the RF Control Signal

Ensure the RF input power/voltage does not exceed the maximum rating. Gradually increase the RF control input voltage while monitoring the modulation depth to avoid overloading the modulator.

5. Using the EOCV with a Vector Network Analyzer (VNA)

The EOCV is well suited for high-frequency testing of electro-optic devices (DUTs) using a Vector Network Analyzer (VNA). The system operates as follows: System Setup:Connect Port 1 of the VNA to the EOCV's input. The EOCV converts the electrical signal from the VNA into an optical signal and couples it into the O-E DUT. The electrical output of the O-E DUT is fed into Port 2 of the VNA.Measurement: The VNA measures the response of the DUT as a function of frequency. The recorded response combines the characteristics of the EOCV and the DUT. Calibration:For accurate testing, we provide calibration tools to isolate the DUT's response from the EOCV's intrinsic characteristics, ensuring precise measurements.

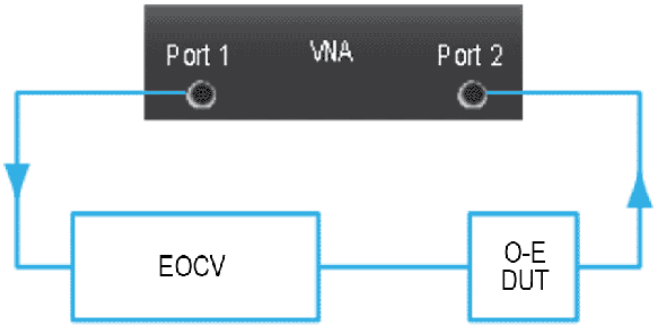

Information contained herein is deemed to be reliable and accurate as of the issue date. We reserve the right to change the design or specifications at any time without notice.
Agiltron is a registered trademark of Optowares Corporation in the U.S. and other countries.

Application Notes

Fiber Core Alignment
Note that the minimum attenuation for these devices depends on excellent core-to-core alignment when the connectors are mated. This is crucial for shorter wavelengths with smaller fiber core diameters that can increase the loss of many decibels above the specification if they are not perfectly aligned. Different vendors' connectors may not mate well with each other, especially for angled APC.

Fiber Cleanliness
Fibers with smaller core diameters (<5 µm) must be kept extremely clean, contamination at fiber-fiber interfaces, combined with the high optical power density, can lead to significant optical damage. This type of damage usually requires re-polishing or replacement of the connector.

Maximum Optical Input Power
Due to their small fiber core diameters for short wavelength and high photon energies, the damage thresholds for device is substantially reduced than the common 1550nm fiber. To avoid damage to the exposed fiber end faces and internal components, the optical input power should never exceed 20 mW for wavelengths shorter 650nm. We produce a special version to increase the how handling by expanding the core side at the fiber ends.

Information contained herein is deemed to be reliable and accurate as of the issue date. We reserve the right to change the design or specifications at any time without notice.
Agiltron is a registered trademark of Optowares Corporation in the U.S. and other countries.